IMAS GROUP

REAL QUALITY MADE IN ITALY

# flaT panel

## Radiators

60 JAHRE ERFAHRUNG ★ YEARS OF EXPERIENCE ★ ANNI DI ESPERIENZA

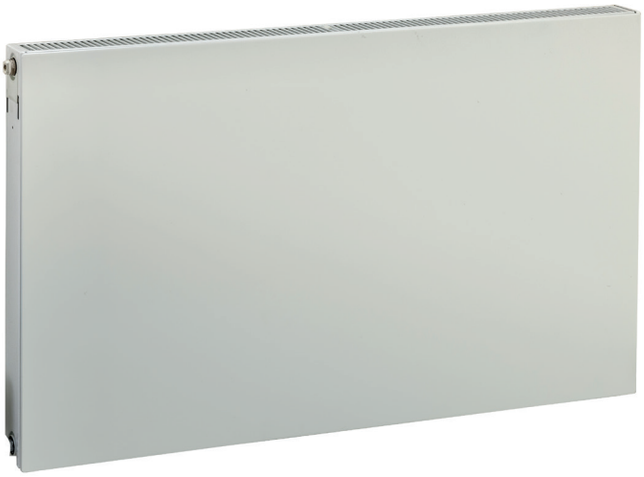

# Flat Fronted Panel Radiators

The sleek flat front panel radiators are a cost effective, stylish and practical alternative to standard radiators. Available in the most popular sizes they are easy to install and the flat face provides a superior finish which is easier to maintain and clean.

## *IM11 Type 11 Horizontal (pag. 4-5)*

Single steel flat panel with a single convector

- 3 heights
- 12 widths
- White RAL 9016 finish
- Available from stock
- 10 Year Guarantee

## *IM21 Type 21 Horizontal (pag. 6-7)*

Double steel flat panels with single convector

- 1 height
- 5 widths
- White RAL 9016 finish
- Available from stock
- 10 Year Guarantee

## *IM22 Type 22 Horizontal (pag. 8-9)*

Double steel flat panels with double convectors

- 4 heights
- 12 widths
- White RAL 9016 finish
- Available from stock
- 10 Year Guarantee

## *Type Vertical (10-11)*
## *Type 10-11-20-21-22*

- 4 heights
- 4 widths
- White RAL 9016 finish
- Available from stock
- 10 Year Guarantee

Flat Panel radiators are manufactured and tested to EN442

# *IM11 Type 11 Horizontal flat panel radiator*

- Single flat panel
- Single convector
- 3 heights and 12 widths
- White RAL 9016 finish
- Available from stock
- 10 year guarantee

**Type 11 Profile**

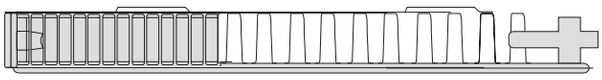

Single steel panel with a single convector.

**Technical Drawing**

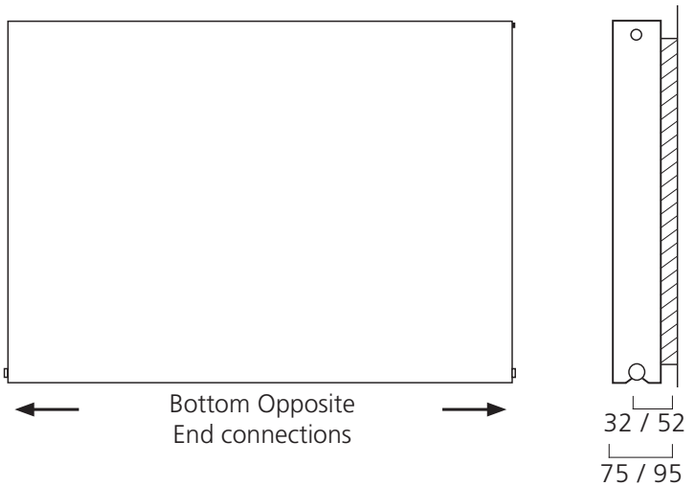


**Pipe Centres**

| | | |
|---|---|---|
| Pipe centres left to right | = | Width plus valves |
| Pipe centres from wall | = | 32mm / 52mm |
| Depth from wall | = | 75mm / 95mm |

## Radiator models and sizes

| Model | Dimensions (mm) | | | | Output Δt 50°c | | Output Δt 55.5°c | | Output Δt 60°c | |
|---|---|---|---|---|---|---|---|---|---|---|
| | Height | Width | Depth | Weight (kg) | Watts | Btu's | Watts | Btu's | Watts | Btu's |
| 11/405/600 | 400 | 600 | 70 | 8.3 | 380 | 1297 | 435 | 1485 | 480 | 1639 |
| 11/405/800 | | 800 | 70 | 11.1 | 506 | 1726 | 580 | 1978 | 640 | 2182 |
| 11/405/1000 | | 1000 | 70 | 13.9 | 633 | 2160 | 725 | 2474 | 800 | 2730 |
| 11/405/1200 | | 1200 | 70 | 16.7 | 760 | 2593 | 871 | 2970 | 961 | 3278 |
| 11/405/1400 | | 1400 | 70 | 19.4 | 886 | 3023 | 1015 | 3463 | 1120 | 3821 |
| 11/405/1600 | | 1600 | 70 | 22.2 | 1013 | 3456 | 1160 | 3959 | 1280 | 4368 |
| 11/405/1800 | | 1800 | 70 | 25.0 | 1139 | 3886 | 1305 | 4451 | 1440 | 4912 |
| 11/405/2000 | | 2000 | 70 | 27.8 | 1265 | 4316 | 1449 | 4944 | 1599 | 5456 |
| 11/505/400 | 500 | 400 | 70 | 7.1 | 301 | 1027 | 345 | 1176 | 380 | 1298 |
| 11/505/600 | | 600 | 70 | 10.6 | 452 | 1542 | 518 | 1766 | 571 | 1949 |
| 11/505/800 | | 800 | 70 | 14.1 | 602 | 2054 | 690 | 2353 | 761 | 2596 |
| 11/505/1000 | | 1000 | 70 | 17.7 | 752 | 2566 | 861 | 2939 | 951 | 3243 |
| 11/505/1200 | | 1200 | 70 | 21.2 | 903 | 3081 | 1034 | 3529 | 1141 | 3894 |
| 11/505/1400 | | 1400 | 70 | 24.7 | 1053 | 3593 | 1206 | 4115 | 1331 | 4541 |
| 11/505/1600 | | 1600 | 70 | 28.3 | 1204 | 4108 | 1379 | 4705 | 1522 | 5193 |
| 11/505/1800 | | 1800 | 70 | 31.8 | 1355 | 4623 | 1552 | 5295 | 1713 | 5844 |
| 11/505/2000 | | 2000 | 70 | 35.3 | 1505 | 5135 | 1724 | 5882 | 1902 | 6491 |
| 11/605/400 | 600 | 400 | 70 | 8.7 | 347 | 1184 | 397 | 1356 | 439 | 1497 |
| 11/605/600 | | 600 | 70 | 13.1 | 522 | 1781 | 598 | 2040 | 660 | 2251 |
| 11/605/800 | | 800 | 70 | 17.4 | 696 | 2375 | 797 | 2720 | 880 | 3002 |
| 11/605/1000 | | 1000 | 70 | 21.8 | 869 | 2965 | 995 | 3396 | 1098 | 3748 |
| 11/605/1200 | | 1200 | 70 | 26.2 | 1043 | 3559 | 1195 | 4076 | 1318 | 4499 |
| 11/605/1400 | | 1400 | 70 | 30.5 | 1217 | 4152 | 1394 | 4756 | 1538 | 5248 |
| 11/605/1600 | | 1600 | 70 | 34.9 | 1391 | 4746 | 1593 | 5436 | 1758 | 5999 |
| 11/605/1800 | | 1800 | 70 | 39.2 | 1565 | 5340 | 1793 | 6116 | 1978 | 6750 |
| 11/605/2000 | | 2000 | 70 | 43.6 | 1739 | 5933 | 1992 | 6796 | 2198 | 7500 |

The Type 11 has a test pressure of 13 Bar, maximum operating pressure of 8 bar and the maximum working temperature is 110°C

# *IM21 Type 21 Horizontal flat panel radiator*

- Double flat panels
- Single convector
- 1 height and 5 widths
- White RAL 9016 finish
- Available from stock
- 10 year guarantee

**Type 21 (p+) Profile**

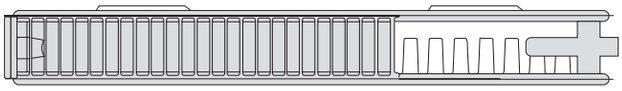

Double steel panels (one front, one back) with a single convector.

**Technical Drawing**

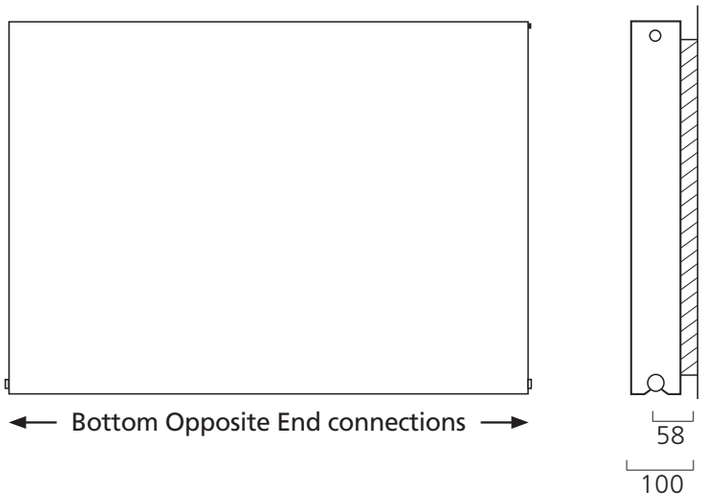


**Pipe Centres**

| | | |
|---|---|---|
| Pipe centres left to right | = | Width plus valves |
| Pipe centres from wall | = | 58mm |
| Depth from wall | = | 100mm |

## Radiator models and sizes

| Model | Dimensions (mm) | | | | Output Δt 50°c | | Output Δt 55.5°c | | Output Δt 60°c | |
|---|---|---|---|---|---|---|---|---|---|---|
| | Height | Width | Depth | Weight (kg) | Watts | Btu's | Watts | Btu's | Watts | Btu's |
| 21/605/600 | 600 | 600 | 75 | 13.1 | 729 | 2487 | 835 | 2849 | 921 | 3144 |
| 21/605/800 | | 800 | 75 | 17.4 | 972 | 3316 | 1113 | 3799 | 1229 | 4192 |
| 21/605/1000 | | 1000 | 75 | 21.8 | 1215 | 4146 | 1392 | 4748 | 1536 | 5240 |
| 21/605/1200 | | 1200 | 75 | 26.2 | 1458 | 4975 | 1670 | 5698 | 1843 | 6288 |
| 21/605/1400 | | 1400 | 75 | 30.5 | 1701 | 5804 | 1948 | 6648 | 2150 | 7336 |

The Type 21 (p+) has a test pressure of 13 Bar, maximum operating pressure of 8 bar and the maximum working temperature is 110°C

# *IM22 Type 22 Horizontal flat panel radiator*

- Double flat panels
- Double convectors
- 4 heights and 12 widths
- White RAL 9016 finish
- Available from stock
- 10 year guarantee

**Type 22 Profile**

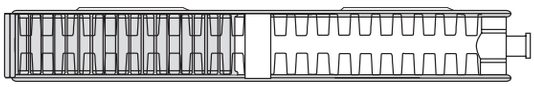

Double steel panels (one front, one back) with double convectors.

**Technical Drawing**

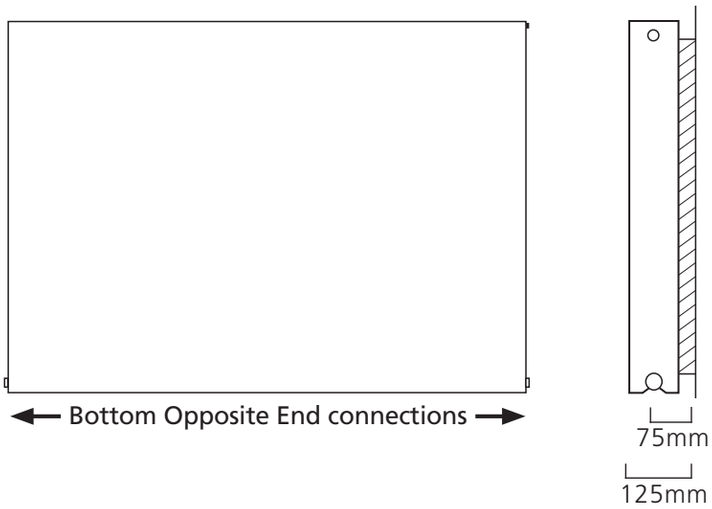


**Pipe Centres**

| | | |
|---|---|---|
| Pipe centres left to right | = | Width plus valves |
| Pipe centres from wall | = | 75mm |
| Depth from wall | = | 125mm |

## Radiator models and sizes

| Model | Dimensions (mm) | | | | Output Δt 50°c | | Output Δt 55.5°c | | Output Δt 60°c | |
|---|---|---|---|---|---|---|---|---|---|---|
| | Height | Width | Depth | Weight (kg) | Watts | Btu's | Watts | Btu's | Watts | Btu's |
| 22/305/800 | 300 | 800 | 102 | 15.8 | 702 | 2395 | 804 | 2743 | 887 | 3028 |
| 22/305/1000 | | 1000 | 102 | 19.7 | 878 | 2996 | 1006 | 3431 | 1110 | 3787 |
| 22/305/1200 | | 1200 | 102 | 23.6 | 1053 | 3593 | 1206 | 4115 | 1331 | 4541 |
| 22/305/1400 | | 1400 | 102 | 27.6 | 1229 | 4193 | 1408 | 4803 | 1553 | 5300 |
| 22/305/1600 | | 1600 | 102 | 31.5 | 1404 | 4790 | 1608 | 5487 | 1775 | 6055 |
| 22/305/1800 | | 1800 | 102 | 35.5 | 1580 | 5391 | 1810 | 6175 | 1997 | 6814 |
| 22/405/400 | 400 | 400 | 102 | 9.7 | 448 | 1529 | 513 | 1751 | 566 | 1932 |
| 22/405/600 | | 600 | 102 | 14.6 | 672 | 2293 | 770 | 2626 | 849 | 2898 |
| 22/405/800 | | 800 | 102 | 19.5 | 896 | 3057 | 1026 | 3502 | 1133 | 3864 |
| 22/405/900 | | 900 | 102 | 21.95 | 1009 | 3443 | 1155 | 3942 | 1275 | 4350 |
| 22/405/1000 | | 1000 | 102 | 24.4 | 1121 | 3825 | 1284 | 4381 | 1417 | 4835 |
| 22/405/1200 | | 1200 | 102 | 29.2 | 1345 | 4589 | 1541 | 5256 | 1700 | 5801 |
| 22/405/1400 | | 1400 | 102 | 34.1 | 1569 | 5353 | 1797 | 6132 | 1983 | 6767 |
| 22/405/1600 | | 1600 | 102 | 39.0 | 1793 | 6118 | 2054 | 7007 | 2266 | 7733 |
| 22/405/1800 | | 1800 | 102 | 43.9 | 2017 | 6882 | 2310 | 7883 | 2549 | 8699 |
| 22/405/2000 | | 2000 | 102 | 48.7 | 2241 | 7646 | 2567 | 8758 | 2833 | 9665 |
| 22/505/400 | 500 | 400 | 102 | 12.0 | 541 | 1846 | 620 | 2114 | 684 | 2333 |
| 22/505/600 | | 600 | 102 | 18.0 | 811 | 2767 | 929 | 3169 | 1025 | 3498 |
| 22/505/800 | | 800 | 102 | 24.0 | 1082 | 3692 | 1239 | 4229 | 1368 | 4666 |
| 22/505/1000 | | 1000 | 102 | 30.1 | 1352 | 4613 | 1549 | 5284 | 1709 | 5831 |
| 22/505/1200 | | 1200 | 102 | 36.1 | 1622 | 5534 | 1858 | 6339 | 2050 | 6995 |
| 22/505/1400 | | 1400 | 102 | 42.1 | 1893 | 6459 | 2168 | 7398 | 2393 | 8164 |
| 22/505/1600 | | 1600 | 102 | 48.1 | 2163 | 7380 | 2478 | 8453 | 2734 | 9329 |
| 22/505/1800 | | 1800 | 102 | 54.1 | 2434 | 8305 | 2788 | 9512 | 3077 | 10497 |
| 22/505/2000 | | 2000 | 102 | 60.1 | 2704 | 9226 | 3097 | 10568 | 3418 | 11662 |
| 22/605/400 | 600 | 400 | 102 | 33.2 | 650 | 2218 | 745 | 2540 | 822 | 2804 |
| 22/605/600 | | 600 | 102 | 22.5 | 976 | 3330 | 1118 | 3814 | 1234 | 4209 |
| 22/605/700 | | 700 | 102 | 26.25 | 1138 | 3883 | 1304 | 4449 | 1439 | 4910 |
| 22/605/800 | | 800 | 102 | 30.0 | 1301 | 4439 | 1490 | 5084 | 1644 | 5611 |
| 22/605/900 | | 900 | 102 | 33.75 | 1463 | 4992 | 1675 | 5718 | 1849 | 6310 |
| 22/605/1000 | | 1000 | 102 | 37.5 | 1625 | 5545 | 1861 | 6351 | 2054 | 7009 |
| 22/605/1100 | | 1100 | 102 | 41.25 | 1788 | 6101 | 2047 | 6986 | 2260 | 7709 |
| 22/605/1200 | | 1200 | 102 | 45.0 | 1950 | 6653 | 2234 | 7620 | 2465 | 8409 |
| 22/605/1400 | | 1400 | 102 | 52.5 | 2275 | 7762 | 2606 | 8891 | 2876 | 9811 |
| 22/605/1600 | | 1600 | 102 | 60.0 | 2601 | 8875 | 2979 | 10165 | 3288 | 11218 |
| 22/605/1800 | | 1800 | 102 | 67.5 | 2926 | 9984 | 3351 | 11436 | 3698 | 12620 |
| 22/605/2000 | | 2000 | 102 | 75.0 | 3251 | 11092 | 3724 | 12705 | 4109 | 14021 |

The Type 22 has a test pressure of 13 Bar, maximum operating pressure of 8 bar and the maximum working temperature is 110°C

# *Type Vertical IM 10-11-20-21-22 flat panel radiator*

- White RAL 9016 finish
- Available from stock
- 10 year guarantee

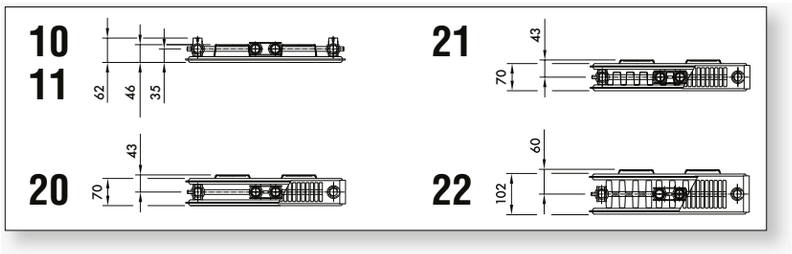

**Technical Drawing**

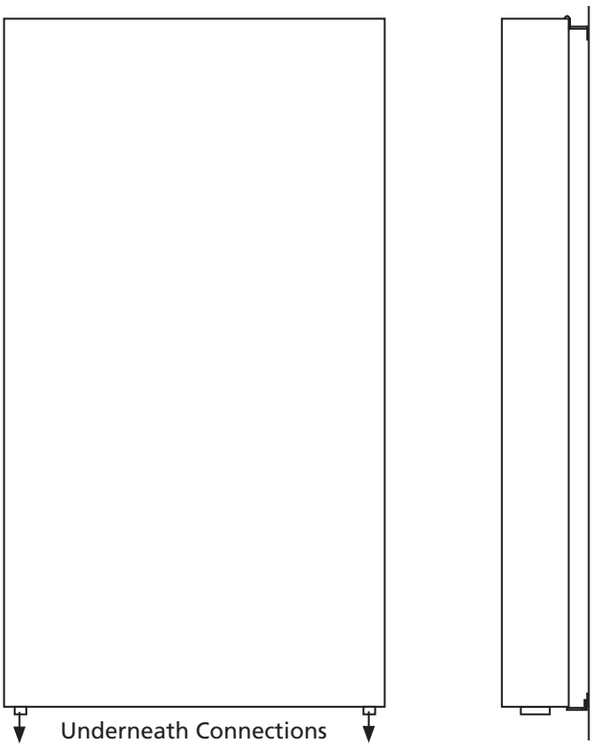


**Optional Towel Bar available**

## Radiator models and sizes

| 20 °C | | Type 10 | | | | Type 11 | | | | Type 20 | | | | Type 21 | | | | Type 22 | | | |
|---|---|---|---|---|---|---|---|---|---|---|---|---|---|---|---|---|---|---|---|---|---|
| Lenght (mm) | T1/T2 | Height H (mm) | | | | | | | | | | | | | | | | | | | |
| | (°C) | 1600 | 1800 | 2000 | 2200 | 1600 | 1800 | 2000 | 2200 | 1600 | 1800 | 2000 | 2200 | 1600 | 1800 | 2000 | 2200 | 1600 | 1800 | 2000 | 2200 |
| 400 | 90/70 | 850 | 944 | 1043 | 1148 | 1094 | 1207 | 1316 | 1421 | 1314 | 1453 | 1582 | 1719 | 1536 | 1688 | 1825 | 1962 | 1840 | 2008 | 2175 | 2342 |
| | 75/65 | 671 | 745 | 823 | 906 | 863 | 952 | 1038 | 1121 | 1037 | 1146 | 1248 | 1356 | 1212 | 1332 | 1440 | 1548 | 1452 | 1584 | 1716 | 1848 |
| | 70/55 | 543 | 603 | 666 | 733 | 699 | 771 | 840 | 908 | 840 | 928 | 1010 | 1098 | 981 | 1078 | 1166 | 1253 | 1175 | 1282 | 1389 | 1496 |
| | 55/45 | 345 | 383 | 424 | 466 | 444 | 490 | 534 | 577 | 534 | 590 | 642 | 698 | 624 | 686 | 741 | 797 | 747 | 815 | 883 | 951 |
| 500 | 90/70 | 1063 | 1181 | 1304 | 1436 | 1368 | 1508 | 1645 | 1776 | 1643 | 1816 | 1977 | 2148 | 1920 | 2110 | 2281 | 2453 | 2300 | 2510 | 2719 | 2928 |
| | 75/65 | 839 | 932 | 1029 | 1133 | 1079 | 1190 | 1298 | 1401 | 1296 | 1433 | 1560 | 1695 | 1515 | 1665 | 1800 | 1935 | 1815 | 1980 | 2145 | 2310 |
| | 70/55 | 679 | 755 | 833 | 917 | 874 | 963 | 1051 | 1134 | 1049 | 1160 | 1263 | 1372 | 1226 | 1348 | 1457 | 1566 | 1469 | 1603 | 1736 | 1870 |
| | 55/45 | 432 | 480 | 530 | 583 | 555 | 613 | 668 | 721 | 661 | 738 | 803 | 873 | 780 | 857 | 927 | 996 | 934 | 1019 | 1104 | 1189 |
| 600 | 90/70 | 1275 | 1417 | 1565 | 1722 | 1640 | 1809 | 1973 | 2131 | 1971 | 2179 | 2373 | 2578 | 2304 | 2532 | 2738 | 2943 | 2761 | 3011 | 3262 | 3513 |
| | 75/65 | 1006 | 1118 | 1235 | 1359 | 1294 | 1427 | 1557 | 1681 | 1555 | 1719 | 1872 | 2034 | 1818 | 1998 | 2160 | 2322 | 2178 | 2376 | 2574 | 2772 |
| | 70/55 | 814 | 905 | 1000 | 1100 | 1048 | 1155 | 1260 | 1361 | 1259 | 1392 | 1515 | 1647 | 1472 | 1617 | 1749 | 1880 | 1763 | 1923 | 2084 | 2244 |
| | 55/45 | 518 | 575 | 636 | 700 | 666 | 735 | 801 | 865 | 800 | 885 | 964 | 1047 | 936 | 1028 | 1112 | 1195 | 1121 | 1223 | 1325 | 1427 |
| 800 | 90/70 | 1488 | 1653 | 1826 | 2010 | 1914 | 2110 | 2303 | 2485 | 2299 | 2543 | 2768 | 3008 | 2688 | 2954 | 3194 | 3434 | 3221 | 3513 | 3806 | 4099 |
| | 75/65 | 1174 | 1304 | 1441 | 1586 | 1510 | 1665 | 1817 | 1961 | 1814 | 2006 | 2184 | 2373 | 2121 | 2331 | 2520 | 2709 | 2541 | 2772 | 3003 | 3234 |
| | 70/55 | 950 | 1056 | 1167 | 1284 | 1222 | 1348 | 1471 | 1588 | 1469 | 1624 | 1768 | 1921 | 1717 | 1887 | 2040 | 2193 | 2057 | 2244 | 2431 | 2618 |
| | 55/45 | 604 | 671 | 742 | 816 | 777 | 857 | 935 | 1009 | 934 | 1033 | 1124 | 1222 | 1092 | 1200 | 1297 | 1394 | 1308 | 1427 | 1546 | 1665 |

The Type 10-11-20-21-22 has a test pressure of 13 Bar, maximum operating pressure of 10 bar and the maximum working temperature is 110°C

## Mounting kits

1)

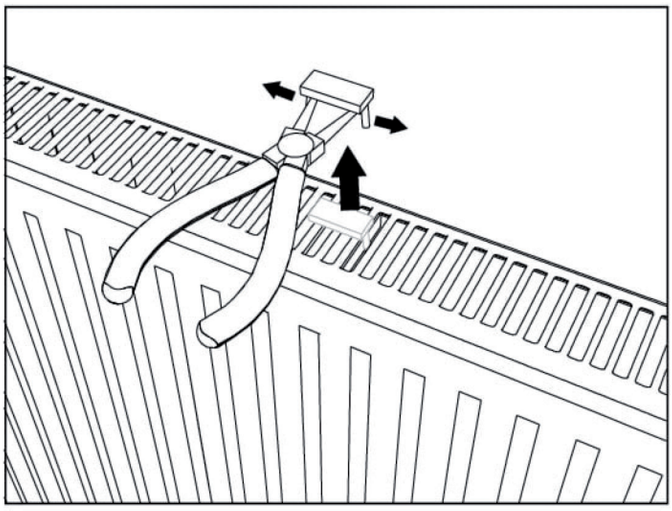

2)

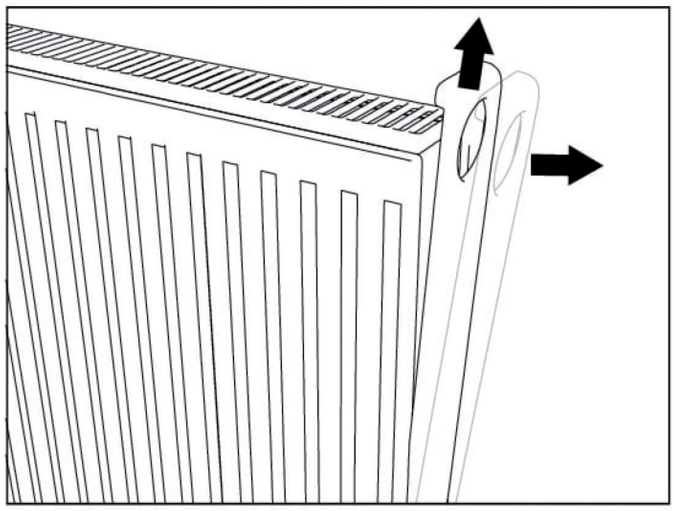

3)

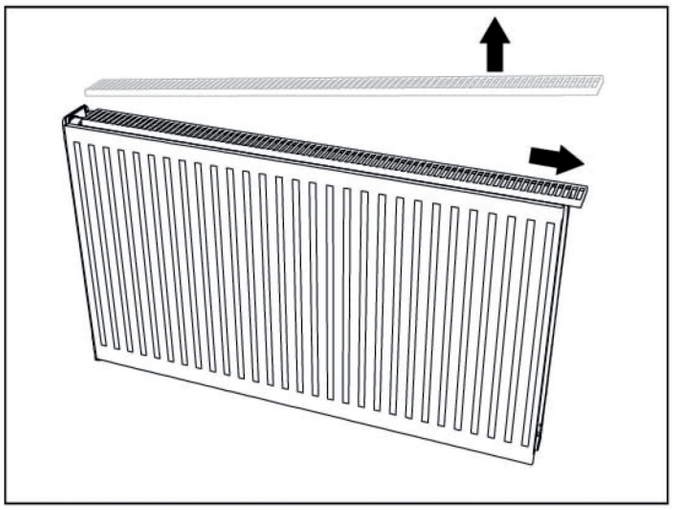

4)

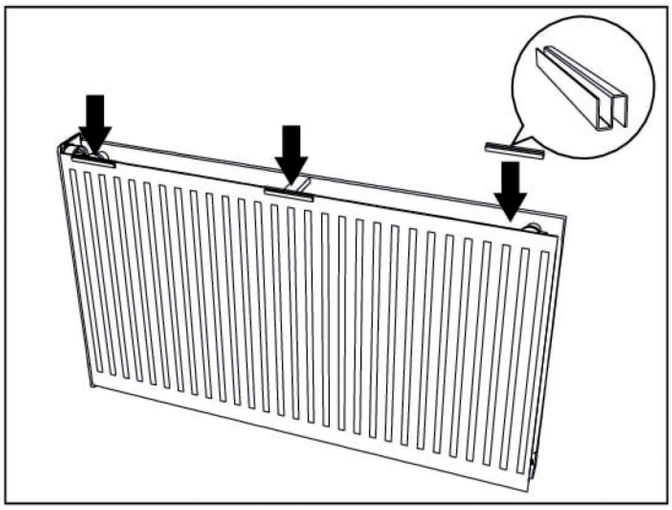

5)

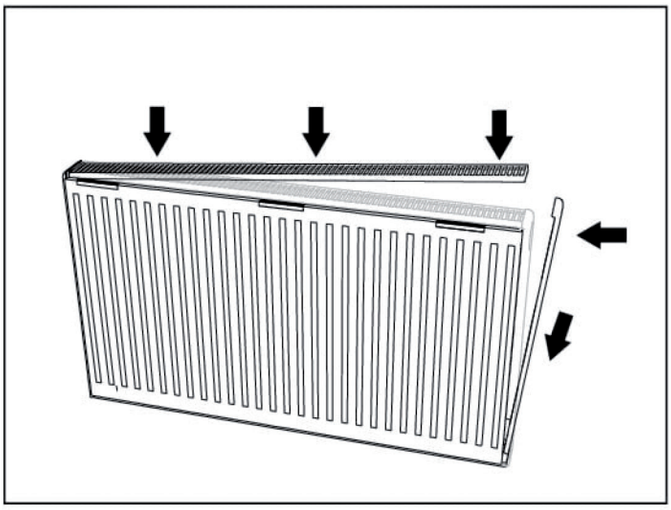

6)

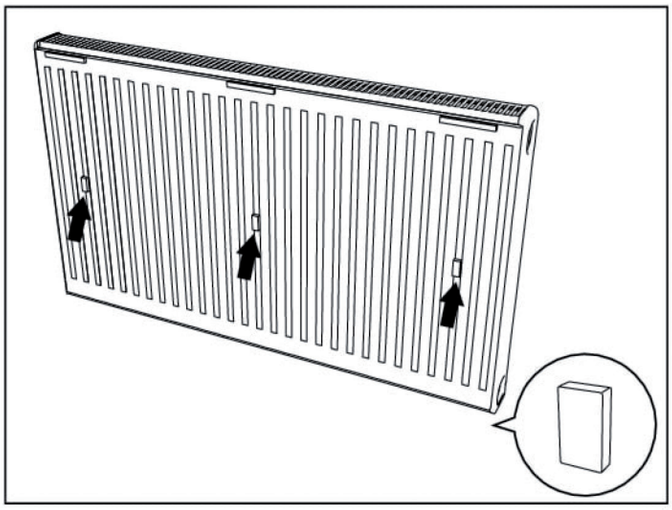

# flaT panel *Radiators*

## *Mounting kits*

7)

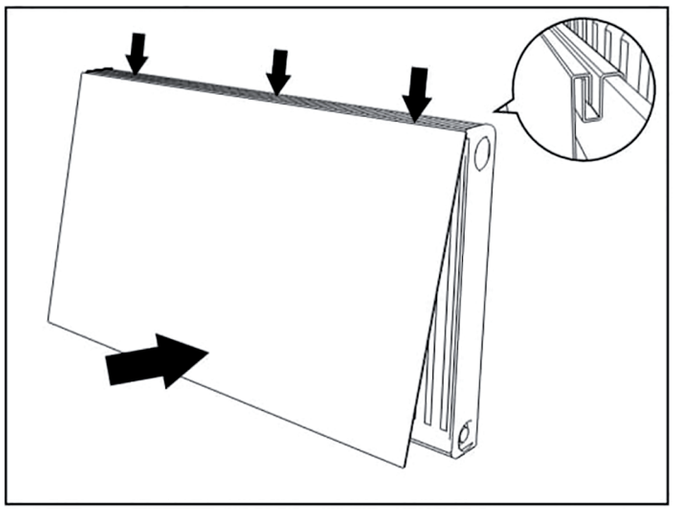

8)

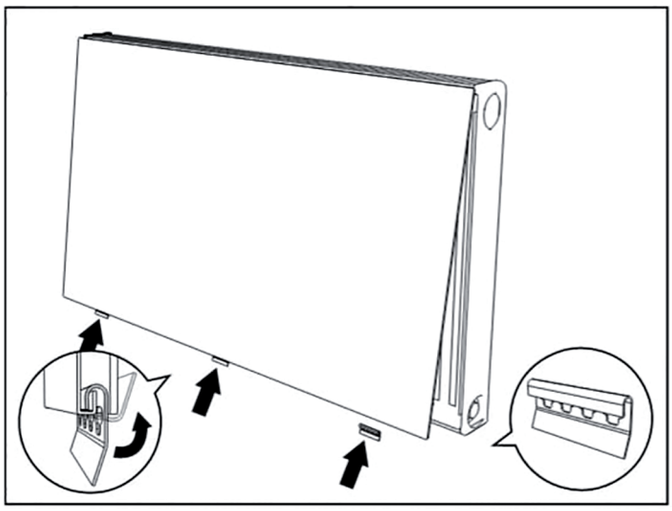

GB Accessories – delivered as standard DE Zubehör – Bestandteil der Verpackung FR Accessoires dans l'emballage NL Toebehoren in de verpakking CZ Příslušenství – součást balení PL Akcesoria – część pakietu RUS Аксессуары - часть пакета:

| 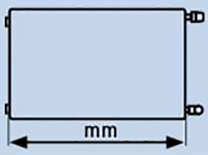 mm | 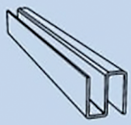 | | 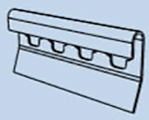 | | € |
|---|---|---|---|---|---|
| 400 - 2000 | 4 | + | 4 | 4 | € 12,45/set |
| 2200 - 3000 | 8 | + | 8 | 8 | € 14,90/set |

**Flat panel powdercoated in RAL 9016** **Min. order q.ty: 10 pcs**

| LENGTH | H. 300 | H. 400 | H. 500 | H. 600 | H. 800 | H. 900 |
|---|---|---|---|---|---|---|
| | € / pc | € / pc | € / pc | € / pc | € / pc | € / pc |
| 400 | 27,22 | 28,12 | 36,06 | 36,29 | 47,46 | 50,69 |
| 500 * | 29,48 | 31,75 | 38,78 | 40,03 | 54,09 | 56,25 |
| 600 | 31,81 | 35,32 | 41,56 | 43,83 | 57,44 | 64,01 |
| 700 * | 33,57 | 38,50 | 45,42 | 47,63 | 64,35 | 73,20 |
| 800 | 35,32 | 41,73 | 49,27 | 51,48 | 69,74 | 81,25 |
| 900 * | 37,59 | 44,51 | 52,79 | 55,74 | 75,58 | 89,30 |
| 1000 | 39,92 | 47,29 | 56,36 | 60,05 | 81,70 | 99,57 |
| 1200 | 44,51 | 54,66 | 63,11 | 68,49 | 93,78 | 116,80 |
| 1400 | 52,33 | 61,75 | 73,65 | 80,46 | 110,22 | 127,01 |
| 1600 | 61,24 | 67,59 | 80,57 | 88,96 | 124,34 | 137,21 |
| 1800 | 64,75 | 74,05 | 88,62 | 97,35 | 138,57 | 148,61 |
| 2000 | 73,77 | 82,73 | 100,76 | 108,18 | 147,99 | 162,67 |
| 2200 * | 81,14 | 91,00 | 111,42 | 119,58 | 159,16 | 175,09 |
| 2400 * | 88,51 | 99,28 | 122,02 | 130,92 | 170,38 | 186,26 |
| 2600 * | 95,88 | 107,50 | 132,17 | 142,49 | 184,56 | 196,52 |
| 2800 * | 159,95 | 115,78 | 142,32 | 154,00 | 198,73 | 208,26 |
| 3000 * | 119,01 | 134,04 | 152,81 | 165,05 | 212,97 | 219,71 |

*** Available only on demand**

# Decorad Plan Vertical - *Curve*

DECORAD

| Type: | Finishing: | Material: |
|---|---|---|
| 10 - 11<br>20 - 21 | Matt* | Steel |
| **Delivery:** | **Warranty:** | **Installation:** |
| 4 weeks | 10 years | Magnets ** |

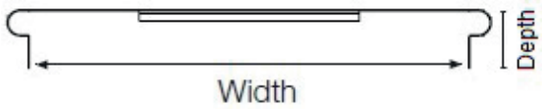


| Code Anthracite RAL 7016 | Gross Price | Height mm | Width mm | Depth mm |
|---|---|---|---|---|
| PFC 68mm 400x1600 | € 131,20 | 1600 | 400 | 68 |
| PFC 68mm 500x1600 | € 144,75 | 1600 | 500 | 68 |
| PFC 68mm 600x1600 | € 176,85 | 1600 | 600 | 68 |
| PFC 68mm 400x1800 | € 140,30 | 1800 | 400 | 68 |
| PFC 68mm 500x1800 | € 155,50 | 1800 | 500 | 68 |
| PFC 68mm 600x1800 | € 188,20 | 1800 | 600 | 68 |
| PFC 68mm 400x2000 | € 149,35 | 2000 | 400 | 68 |
| PFC 68mm 500x2000 | € 166,20 | 2000 | 500 | 68 |
| PFC 68mm 600x2000 | € 200,45 | 2000 | 600 | 68 |
| PFC 68mm 400x2200 | € 158,30 | 2200 | 400 | 68 |
| PFC 68mm 500x2200 | € 176,15 | 2200 | 500 | 68 |
| PFC 68mm 600x2200 | € 212,45 | 2200 | 600 | 68 |

**** Magnets kit: n° 6 magnets to hold securely the panel to the radiator *€ 16,60/kit***

*Type 11K H1800/W500*

Optional white towel holders for type 20 / type 21 / Decorad Vertical - Curve

| Towel Holders | Gross Price | Code |
|---|---|---|
| 400 mm width | € 150,00 | TH400 |
| 500 mm width | € 167,00 | TH500 |
| 600 mm width | € 184,00 | TH600 |

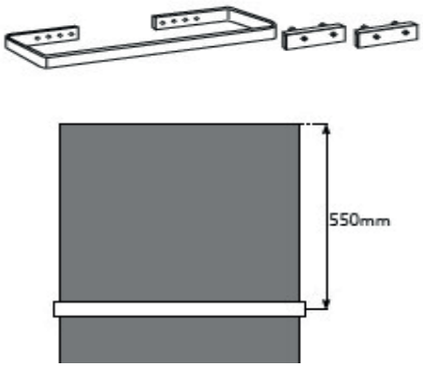


* Also available in White RAL 9016 / Other finishing and colors available on request

60 JAHRE ERFAHRUNG ★ YEARS OF EXPERIENCE ★ ANNI DI ESPERIENZA

IMAS GROUP

REAL QUALITY MADE IN ITALY

**NUOVA IMAS Srl**

31020 San Zenone degli Ezzelini (TREVISO) ITALY - Street Roma, 163 - Tel. +39 0423 968402 - Fax +39 0423 567216

info@imasradiators.com - www.imasradiators.com